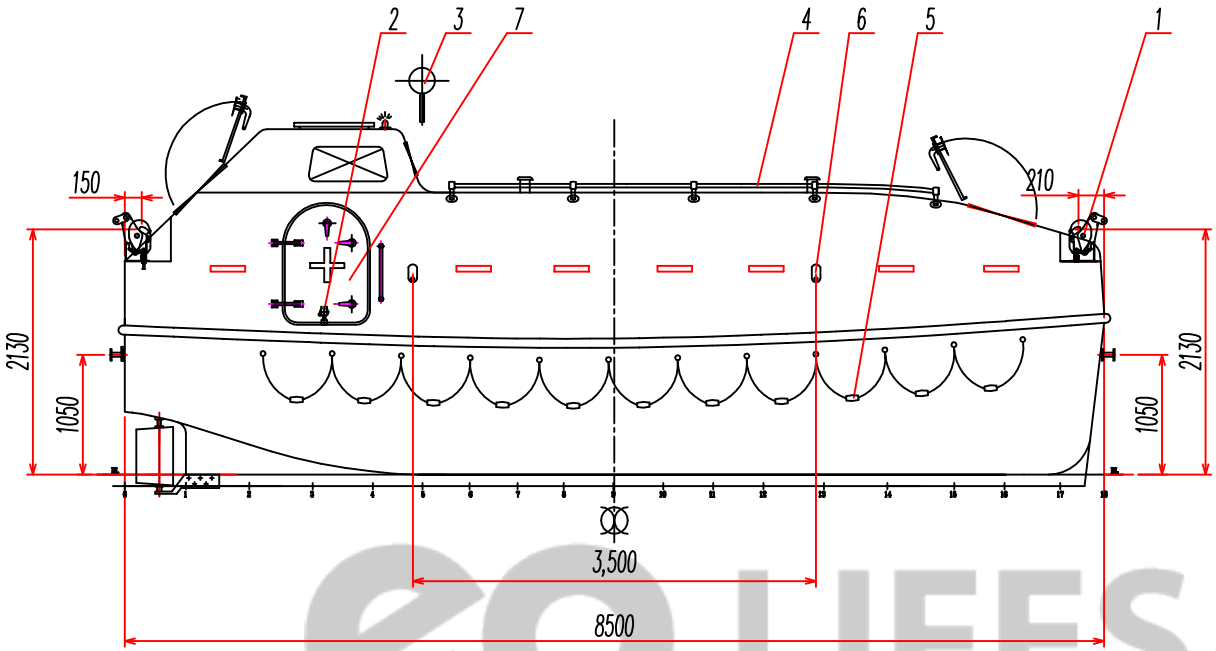

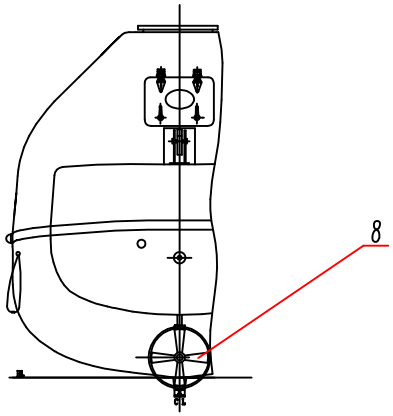

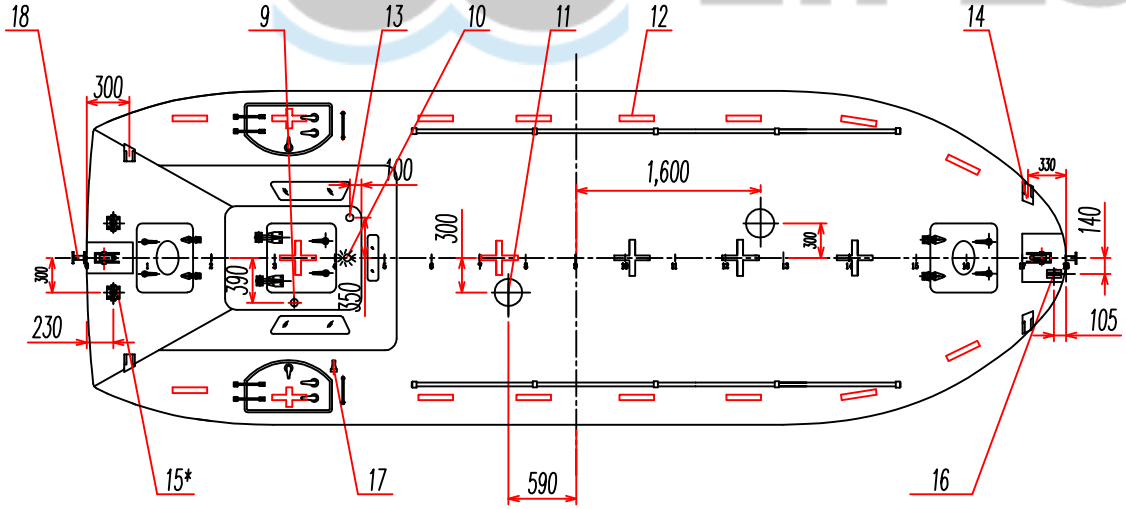

eo LIFESAVING

(Quantity / One boat)

No.	Code	Name	Material	Quantity	Mass	Remarks
18		Guide wheel	Gal.steel	2		
17		Charging socket	Assemble	1		
16		Painter device	Assemble	1		
15		Bitt	Stainless steel	1		
14		Chock	Stainless steel	4		
13		Seat of radar reflector	Stainless steel	1		
12		Retro-reflector band	Plastic	50		
11		Ventilator	Assemble	2		
10		Position light	Product	1		
9		Remote control line hole	Assemble	1		
8		Pivot duct &steering arrangement	Assemble	1		
7		Door window &cover	Assemblt	1		
6		Skate eye-plate	Stainless steel	4		
5		Lifeline appliance	Assemble	1		
4		Rail	Stainless steel	1		
3		Radar reflector	Product	1		
2		Oar seat	Stainless steel	2		
1		Hook device arrangement	Assemble	1		

Description	Material	Weight(kg)	
	~	~	
Date	Drawing by	2005/1/21	Projection
	Checked by	2005/1/21	
Mark	Approved by	2005/1/21	Scale 1:30

GENERAL ARRANGEMENT OF LIFE BOAT
JY-QFP-8.50X

Page B-1

This drawing shows the port side boat.
The starboard side boat is to be symmetry.