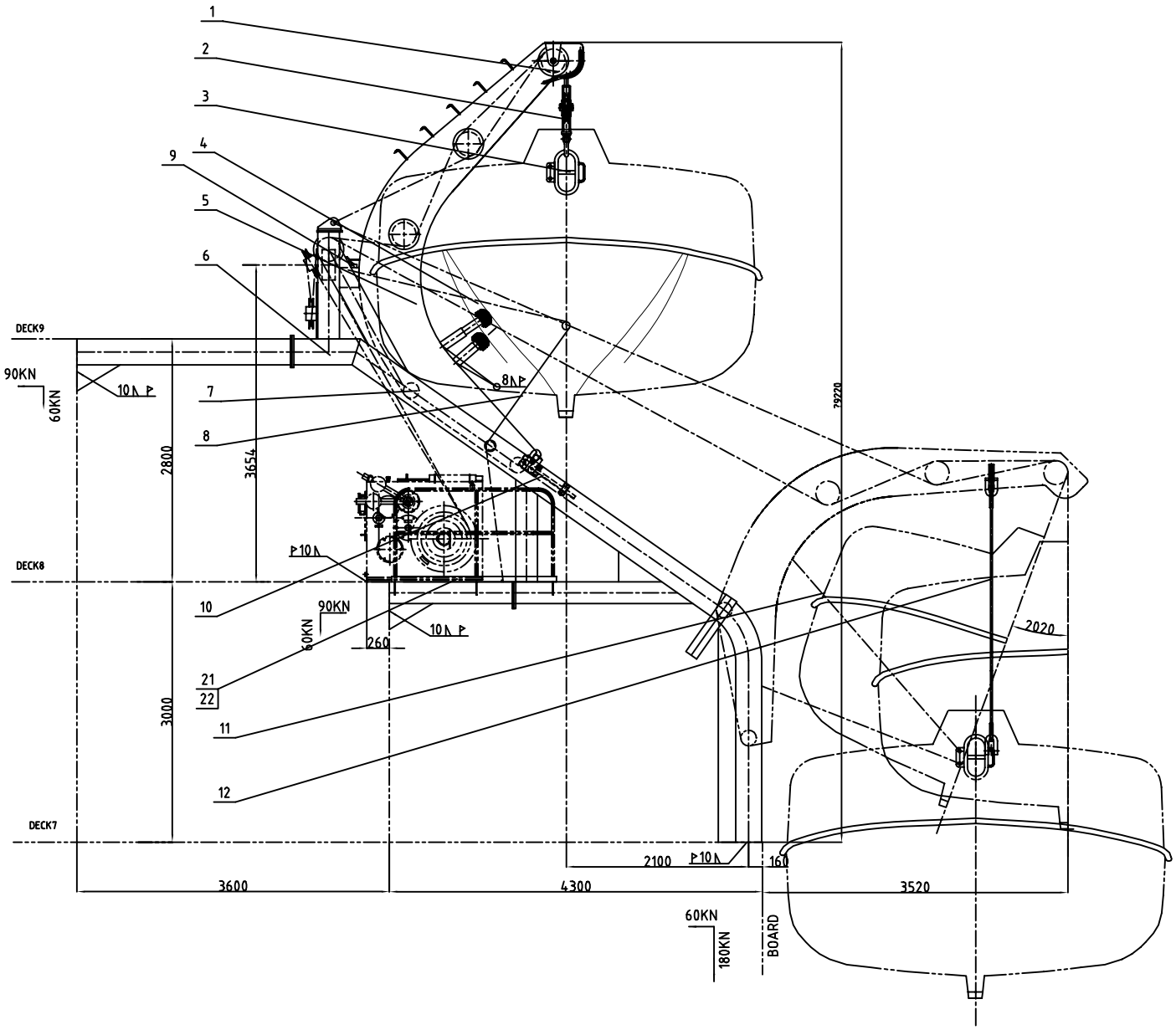

TECHNICAL REQUIREMENT
ｼｼﾊﾅｪﾇ

1. THIS DAVIT COMPLETELY COMPLIES WITH MSC.47｣ｨ66｣ｮOF "AMENDMENTS TO SOLAS 74" AND MSC.48｣ｨ66｣ｮOF "LSA CODE"
ｱｾｵﾅｧｼﾜｰｴ､ｶSOLAS 74ﾐ｡ｺﾒｸ､ｷMSC.47｣ｨ66｣ｮｾﾅ｡鯑ｰ､ｶLSAｹ｢ﾅｷMSC.48｣ｨ66｣ｮｾﾅ｡鯑ｪﾇ??ﾐﾉ鯑ﾆｵﾄ.

2. THIS DRAWING SHOWS THE LEFT DAVIT INSTALLED ON PORTSIDE THE RIGHT DAVIT IS SYMMETRICAL.
ｱｾﾍｼﾋ?ｾｵ?ｱｼｼﾉﾎｪﾗ?ｽ. ｲｼｺﾃﾔﾚｴｬｲｰﾗ?ﾏ, ﾓﾒﾊｽｵ?ｱｼｼｶﾔｳﾆｺﾆｬ?ｰｲﾗｰ.

3. THE MAX. SAFETY WORKING LOAD OF THE DAVIT IS 170 kN
ｱｾｵ?ｱｼｼﾗ鍋?ｲﾈｵｹ､ﾗ?ｺｺﾉﾎｪ170kN

4. THE POSITION OF OPERATION PLATE ｣ｨNO. 18｣ｮSHOULD BE DECIDED AT WORKS.
ｷﾅﾍｱｲﾙﾗ?ｸﾊｾﾅﾆ｣ｲｼ準18 ｣ｮ ﾎｻｺﾃﾏｺｳ､ﾈｷｶｲ.

5.TO ENTER THE BOAT FROM THE SHIP DECK.
ｳﾋﾔｱｴﾓｼﾗｰ鯑ﾇﾍｱ.

NO.	CODE	NAME	QTY.	MAT'L	SING	TOT.	REMARKS
22	30 GB93-87	ｦﾜｯｼｬ WASHER	10	65Mn			
21	M30X75 GB5783-86	ﾜﾝｶｲ BOLT	10	A1-70			
20	930ZF-215MP-01	ﾅﾏﾌﾀﾞ NAME PLATE	1	H62			
19	215ZF661-16	ｷｽﾅ/鯑ﾌｰｺﾃUNIT FOR LIFESAVING-ROPE	1	ASSEM			
18	930ZF-215MP-57	ｷﾄﾍｱｲﾙﾗ?ｸﾊｾﾅﾆ｣ｲｼOPERATION PLATE	1	H62			
17	GB867-86 2.5x10	ﾘｯﾄﾞ RIVET	12	ML2			
16	930ZF-215MP-05	ｱ?ｾﾅﾆ INDICTION PLATE	2	H62			
15	215ZF661-15	ｲﾙﾗ?ﾎﾃｲ OPERATION PLATFROM	1	ASSEM		130	
14	215ZF661-14	ﾖｯｸﾅ鯑ﾋ STRUT	1	Q235A		512	
13	215ZF661-12-0	ﾆ?ｾﾋ?ｰﾄﾑｿﾗｰｺﾃBOAT FALL & REMOTE CONTROL UNIT	1	ASSEM		520	
12	215ZF661-11-0	ﾅﾅﾍｯﾗｰｺﾃ HANGING-OFF UNIT	2	ASSEM	36	72	
11	215ZF661-10-0	ﾌﾀﾏｽﾗｰｺﾃ GUY UNIT	2	ASSEM	60	120	
10	215ZF661-09-0	ﾖﾀﾊｶﾗｰｺﾃ STOP UNIT	2	ASSEM	35	70	
9	215ZF661-08-0	ﾏﾞﾎﾀﾗｰｺﾃ LIMIT UNIT	2	ASSEM	6	12	
8	215ZF661-07-0	ﾏﾄﾍｯﾗｰｺﾃ FASTING UNIT	2	ASSEM	20	40	
7	215ZF661-06-0	ﾅﾌｯｸﾗｰｺﾃ ROLLING UNIT	4	ASSEM	130	532	
6	215ZF661-05-0	ﾗﾌﾏ DAVIT FRAME	2	ASSEM	2800	5600	
5	215ZF661-04-0	ｵ?ｱﾌﾛ DAVIT ARM	2	ASSEM	860	1720	
4	215ZF397-15-0	ﾍｺｳｹﾂ BOAT SUPPORT	4	ASSEM	20	80	
3	215ZF661-03-0	ｵ?ｱｽ BOAT FALL CHAIN	2	ASSEM	23	46	
2	215ZF661-02-0	ﾅ､ｶｯﾀｹｳｶ FLOATING TACKLE	2	ASSEM	52	104	
1	215ZF661-01-0	ﾍｯﾄｳﾀｹｳｶ HEAD TACKLE	2	ASSEM	65	130	

DESIGNED		MATERIAL	ASSEM	PROD. NAME	HE170ﾖﾘﾁﾗｻｬｹｱｽｵ?ｱｼｼ HE170 GRAVITY ROLLING TYPE DAVIT
CHECKED		WEIGHT(kg)	ｽ10000		
CHE. OF STA.		SCALE	1:25		
VERIFIED		DATE		DWG. NAME	ﾗｸﾍｼ G.A.
DRAWN		SHEET 1 OF 2			
?ｭｴｲｲｰｸｲｻ岶ｱ				PROJECTION / DWG. No.	215ZF661-00
				DISK FILE	

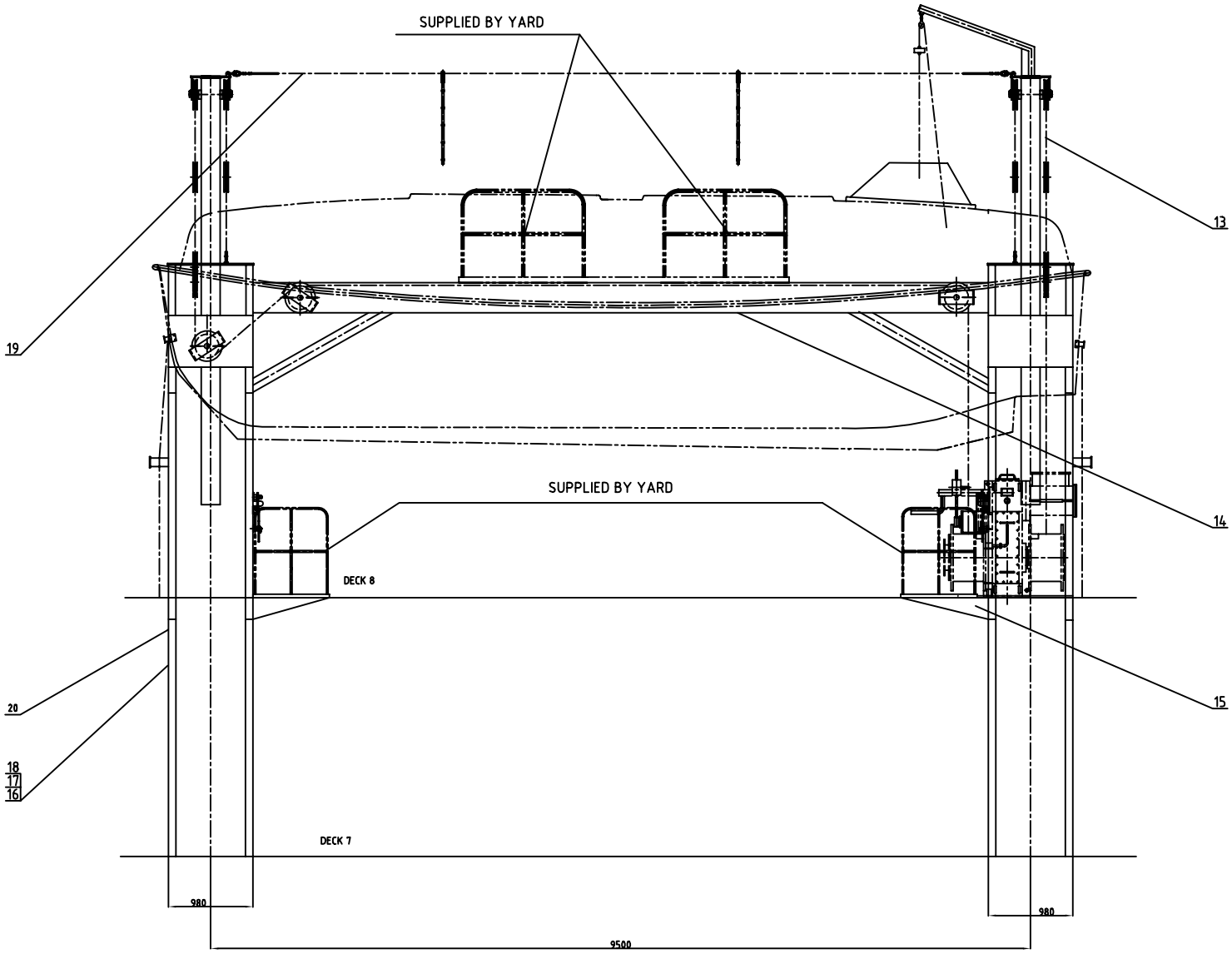

DESIGNED		MATERIAL	ASSEM	PROD. NAME	HE170 GRAVITY ROLLING TYPE DAVIT
CHECKED		WEIGHT(kg)	J1		
DIE. OF STA.		SCALE	1:25		
VERIFIED		DATE		DWG. NAME	HE170 ｵﾄﾞﾌｧｼｸ G.A.
DRAWN		SHEET 2 OF 2			
?ｺｴｷｲｰｸｲｻ崎ｱ				PROJECTION	
				DWG. No.	215ZF661-00
				DISK FILE	