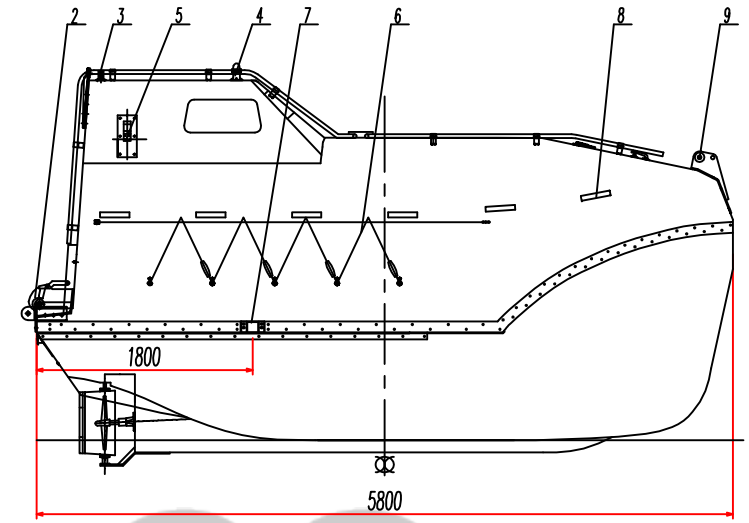

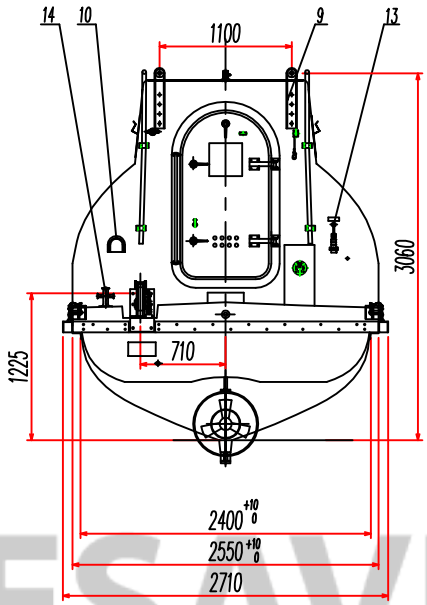

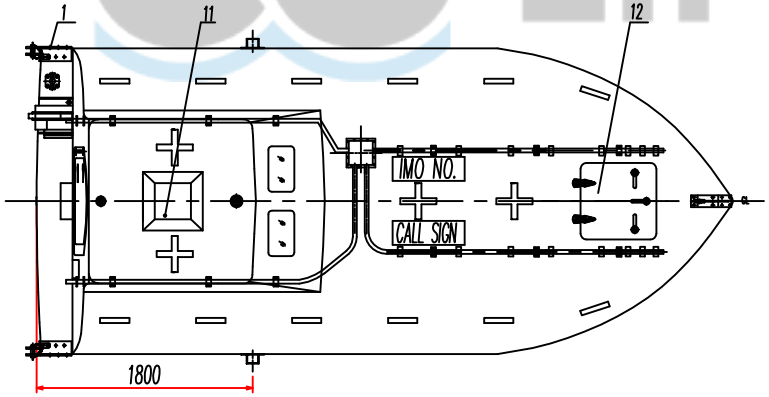

eo LIFESAVING

No.	Code	Name	Material	Quantity	Mass	Remarks
14		Bitt	Stainless steel	1		
13		Charging socket	Product	1		
12		Door, window & cover	Assemble	1		
11		Rain water collector	Brass	1		
10		Ventilation	Assemble	1		
09		Aft&Fore lifting eye plate	CCS-B	3		
08		Reflector tape	Plastic	1st		
07		Block plate	Stainless steel	2		
06		Lifeline appliance	Assemble	1		
05		Lifting ring box	Stainless steel	2		
04		Position light	Product	1		
03		The seat for radar reflector	Stainless steel	1		
02		Hook device	Assemble	1		
01		Eye plate	CCS-B	2		

Mark	Description	Date					
		Drawing by		2009-6-1	Projection	General Arrangement Plan JY-FF-5.8	Page B-1
		Checked by		2009-6-1			
		Approved by		2009-6-1	Scale 1:25	DWG No.: JCS058A-100-02	